康佳 T2586D

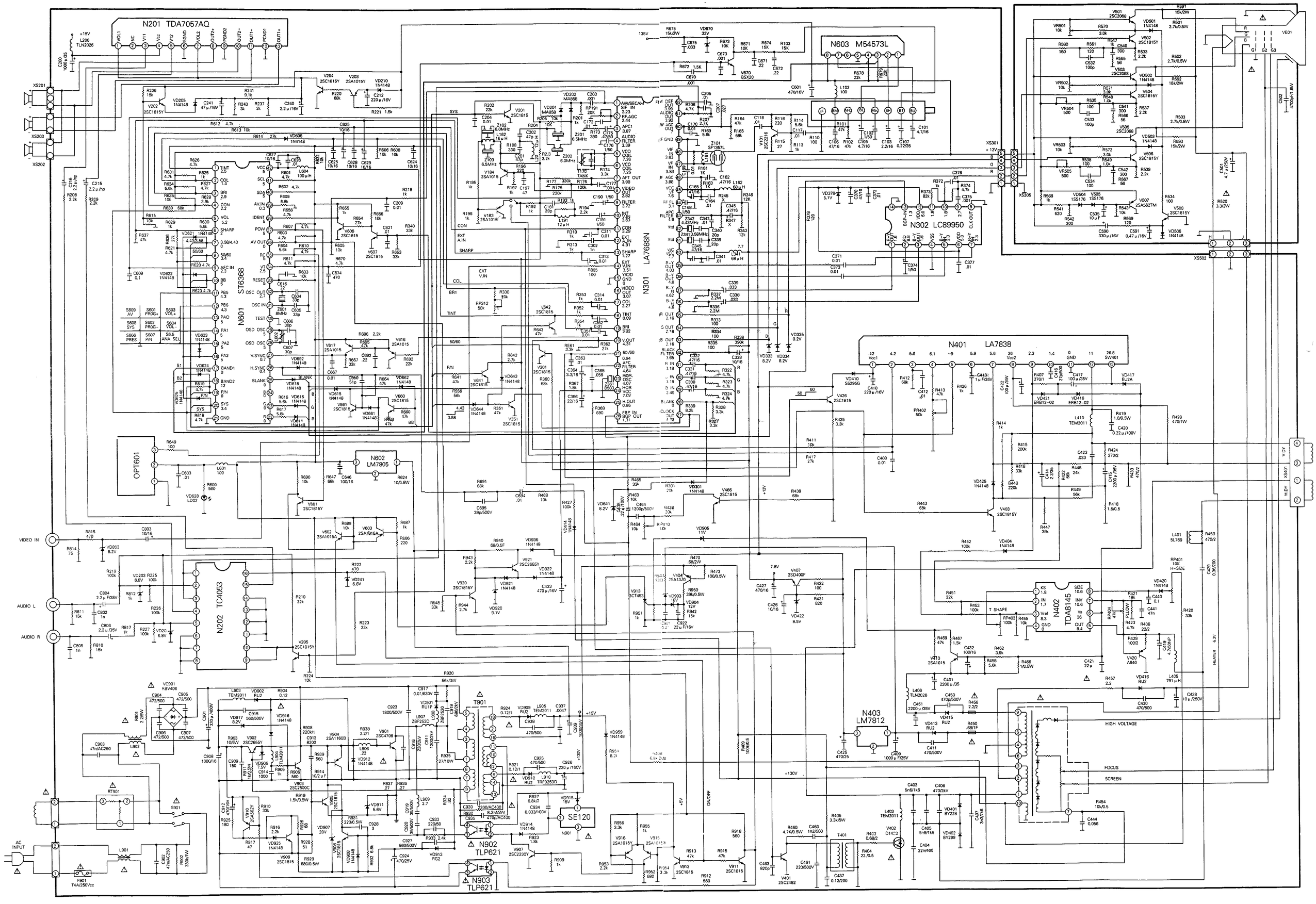
N201 TDA7057AQ
N301 LA7688N
ST6368
N302 LC89950
N401 LA7838
N402 TDA8145
N202 TC4053
N601 OPT601
N602 LM7805
N603 M54573L
N403 LM7812
N901 SE120
N902 TLP621
N903 TLP621
T901
T401
VIDEO IN
AUDIO L
AUDIO R
AC INPUT
HIGH VOLTAGE
FOCUS
SCREEN
HEATER 6.3V
H-SIZE
T SHAPE
VE01
XS201
XS202
XS203
XS301
XS305
XS502
XS401